Professional High-Speed Machine

Establishment in 1995, GENTIGER has become is the name equal to "High Speed Cutting Expert". Our company spirit, "Perfection, Efficiency, Specialization" is embedded in all GENTIGER machines, as we deliver comprehensive machines and services to our customers worldwide.

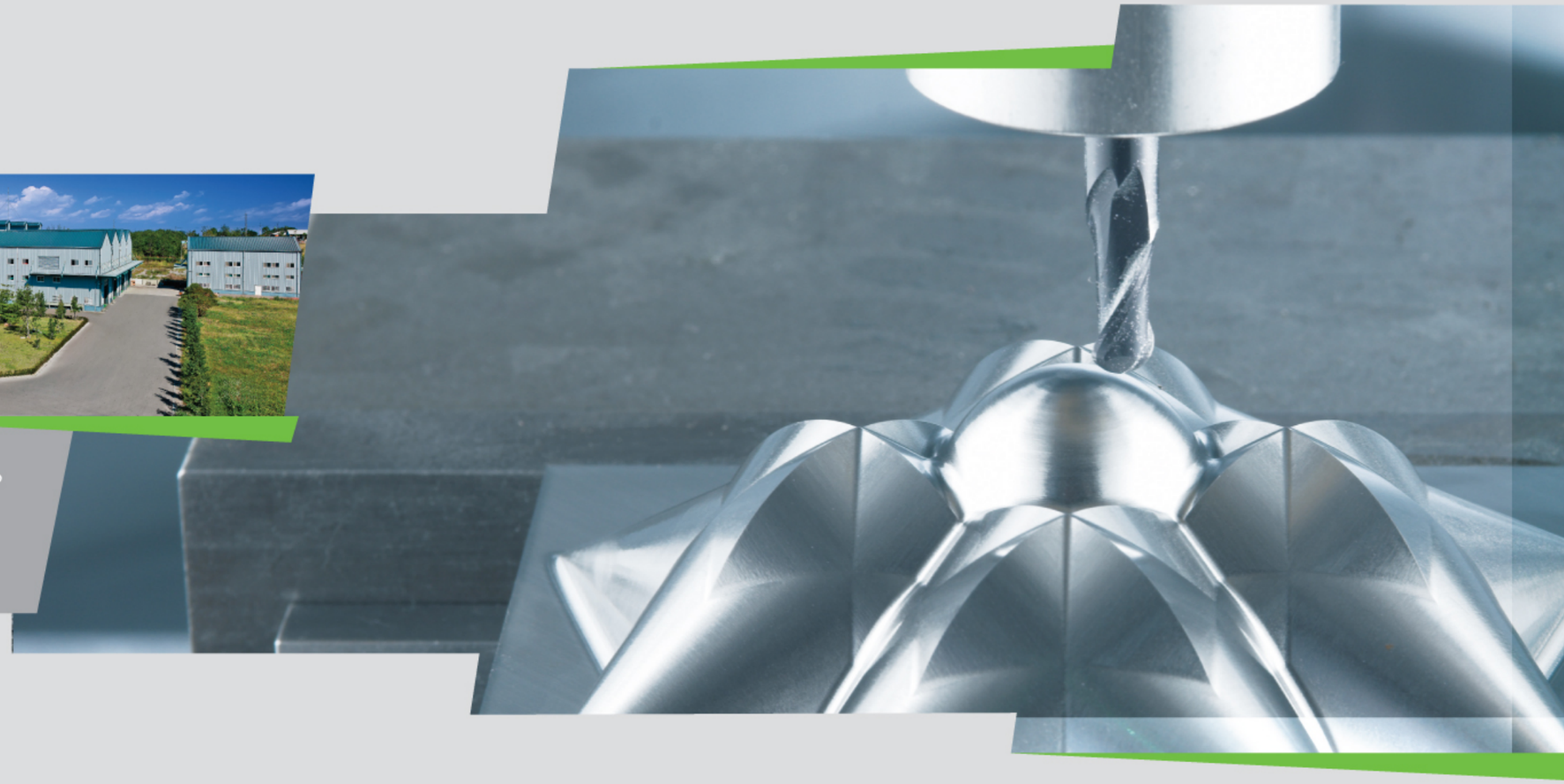

Gentiger Machinery Industrial Co., Ltd.

No. 2-2, Shueitou Lane, Jiahou Rd, Waipu Dist.,
Taichung City 438, Taiwan.
TEL: 886-4-2683-6919 FAX: 886-4-2683-9900
Http://www.gentiger.com.tw
E-mail:gentiger@ms38.hinet.net

147341001012E

GT-66V

High Speed Double Column Machining Center

www.gentiger.com.tw

CE ISO 9001

Professional High-Speed Machine

High Speed · High Precision · High Efficiency

The No.1 Choice for Small Mold and Die Machining

The GT-66V from Gentiger is designed for small mold and die machining. It inherits the high speed, high precision features integrated in a big machining center. In addition, its outstanding stability has been fully recognized by each customer. The GT-66V features double column high speed machine structure enabling the machine to fully exhibit its extraordinary stability and rigidity during performing high speed machining. The machine has X, Y, Z-axis travel of 720 x 500 x 400 mm. The cutting feedrates on three axes are 20 m/min. Three axes are mounted with roller type linear guideways to upgrade stability of travel.

Gentiger GT-66V

Machine Features:

- T-shaped machine structure for exceptional rigidity.
- One piece constructed column and beam.
- Compact construction, combined with ergonomical design, provides maximum convenience of operation.
- Three axes are mounted with high speed, heavy duty roller type linear ways.
- Extra powerful servomotor drive.
- X, Y, Z-axis feedrates: Rapid feedrates: 30 m/min.
  Cutting feedrates: 20 m/min.
- Positioning accuracy: 0.005 mm / Full Stroke. (ISO-230-2)
- Repeatability accuracy: <0.004 mm / Full Stroke. (ISO-230-2)
- Cutter balance should be calibrated to within G2.5.

Double Column High Speed Machine Structure

High Speed! Stable! Rigid!

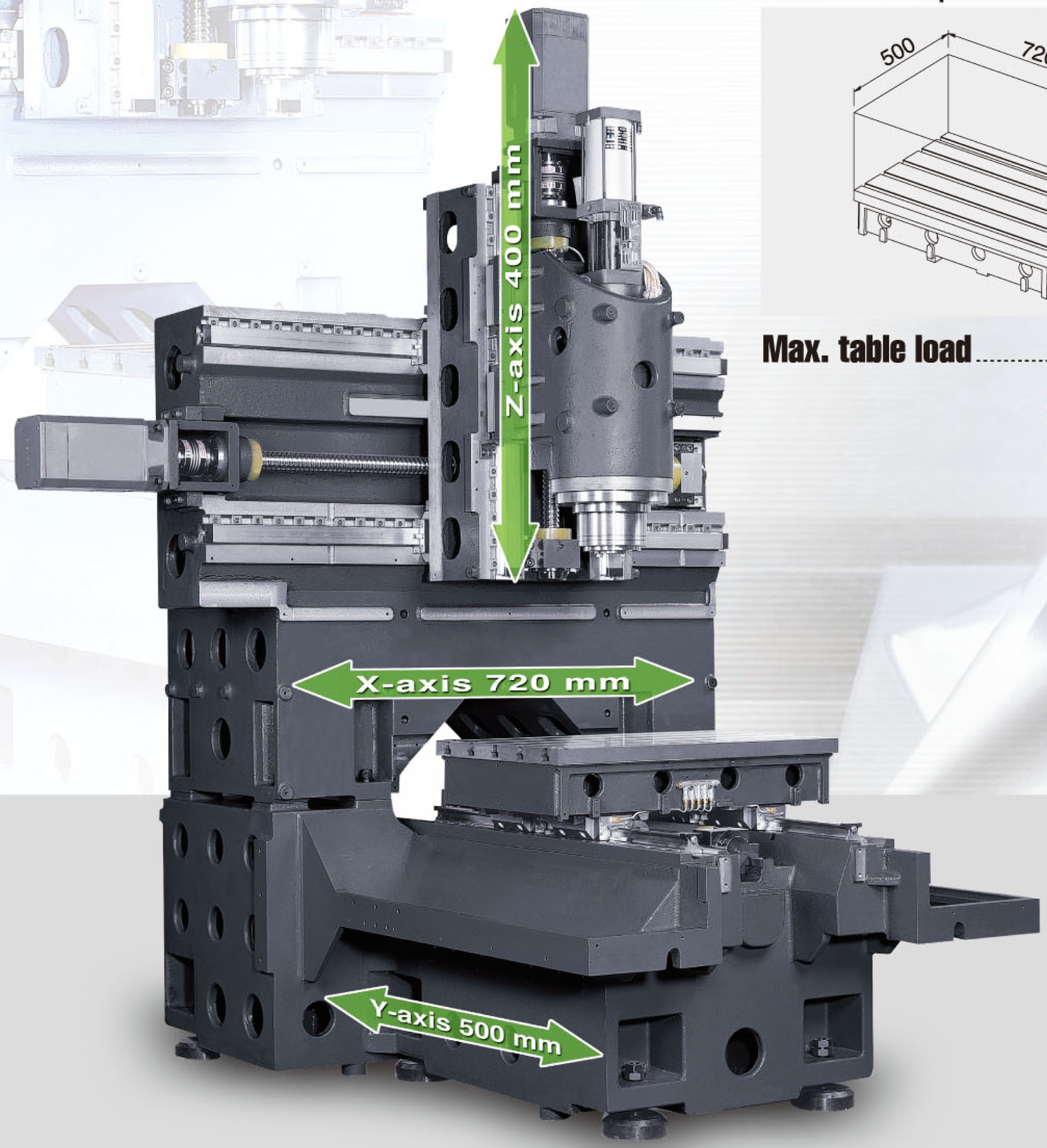

Allowable Workpiece Dimensions:

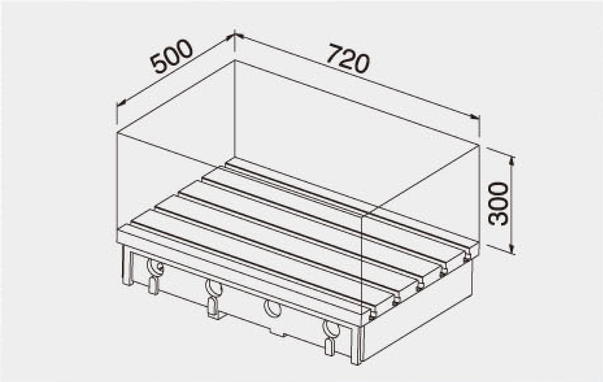

Max. table load ..... 400 kg
(Average load)

Optimal Machine Structure

Specially designed T shape machine structure features superior rigidity. The width of column is the same as the base. The table is independently installed on base, and fully supported through the entire stroke, assuring maximum accuracy and dependability. Long term accuracy at high speed machining is assured.

Lifetime Accuracy

All castings are stress relieved and seasoning treated for long term accuracy and long service life.

Three Axes Ball Screws

- Roller type linear guideways on three axes feature higher feedrate, resist heavier loads, ensure superior dynamic accuracy and a long service life.
- High acceleration speed on 3 axes, X-axis 0.8G, Y-axis 0.9G, and Z-axis 1.0G. This outstanding design greatly reduces machining time while upgrading economical efficiency.
- 3 axes feedrate: rapid feedrate 30 m/min, cutting feedrate 20 m/min.
- Positioning accuracy: 0.005 mm / Full Stroke. (ISO-230-2)
- Repeatability accuracy: <0.004 mm / Full Stroke. (ISO-230-2)
- Cutter balance should be calibrated to within G2.5

Gentiger GT-66V Integrating Many Fine Features in One

Machine Features

Four Blocks on Z-axis Linear Ways Fully Supported Contact-Faces

The Z-axis is mounted with two linear ways. Each linear way has two blocks for full support of contact surfaces. This design results in Z-axis rigidity and increased cutting stability.

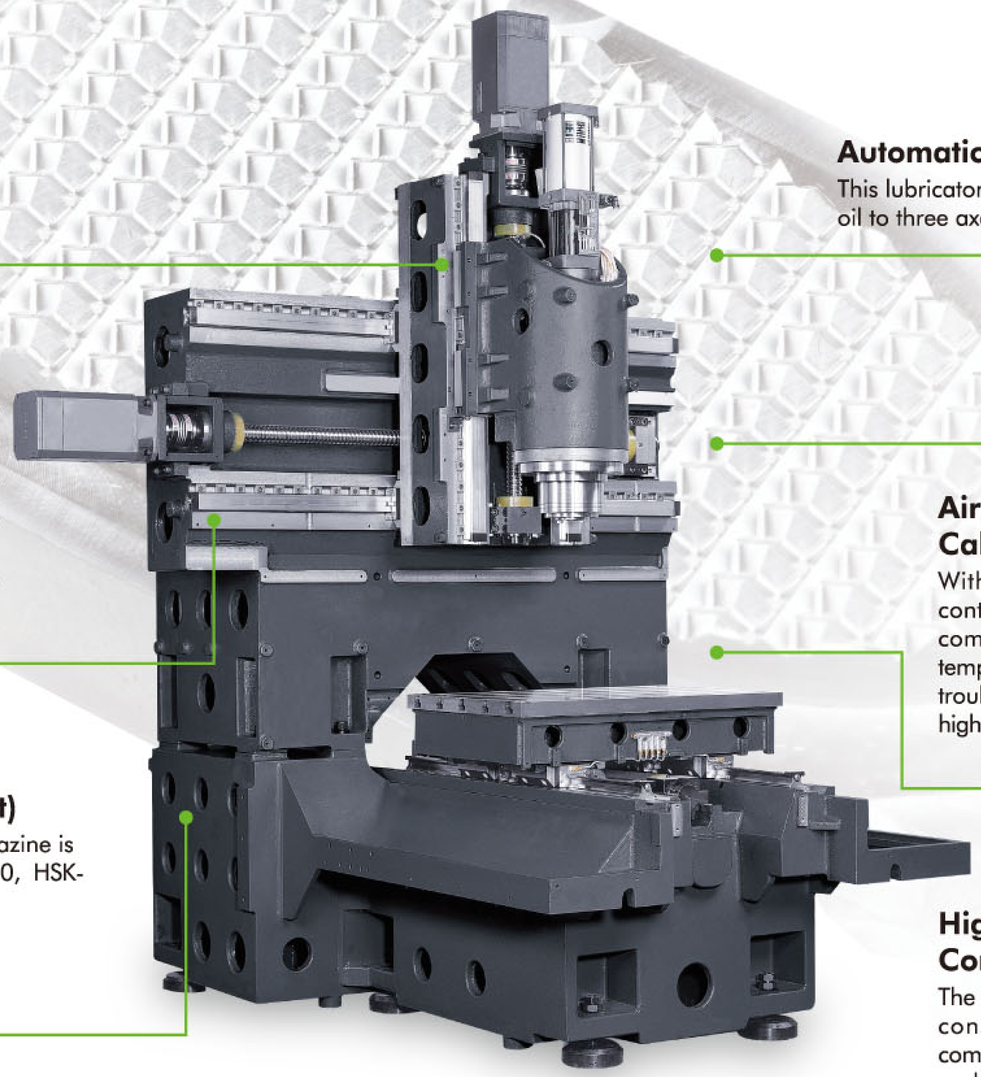

Automatic Lubricator

This lubricator automatically delivers lubrication oil to three axes ball screws and linear ways.

Rigid Roller Type Linear Way

Mounted with the SGR highly rigid roller type linear guide ways combined with the use of roller retainer. These special linear guide ways feature low friction coefficiency, smooth movement and maintenance-free performance for long periods of operation.

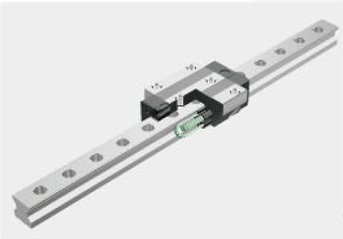

Air Conditioner for Electronic Cabinet

With the use of air conditioner, the controller, motor driver and electronic components may maintain a constant temperature at all times. It also eliminates trouble or machine down-time caused by high temperature for a long time operation.

Disk Type Magazine (Standard Equipment)

The loading capacity in magazine is 16 tools. It accomodates BT-40, HSK-A63, HSK-E50 tool shank.

Optional:

HSK-E50, 24 tools

BT-40, HSK-A63, 20 tools

High Quality Electronic Components

The control circuit in the electrical cabinet consists of high quality electronic components that feature excellent stability and long service life.

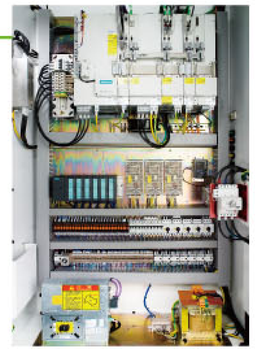

Optional Equipment

CTS Coolant Through Spindle Device

Automatic Tool Length Measurement System (Laser Type)

Automatic Tool Length Measurement System (Mechanical Type)

Automatic parts Measurement Device

Heidenhain Optical Scales on 3 Axes

Oil Fluid Separator

Caterpillar-type Chip Conveyor and Cart

Choice of Various High Precision, High Speed Spindles

T15P

Direct Drive Spindle BT-40 Oil Circulated Cooling

- Maximum spindle speed: 15,000 rpm
- Bearing lubrication: Grease
- Spindle motor: 11/14.75 kW
- Spindle torque: 70/94 Nm
- Spindle inner diameter: Ø70 mm
- High precision ceramic bearings
- Cutter balance should be calibrated to within G2.5

SPINDLE SPEED / POWER DIAGRAM

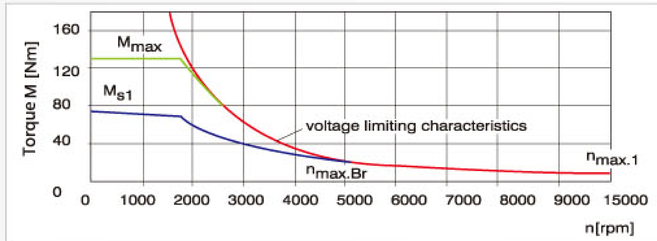

SPINDLE SPEED / POWER DIAGRAM

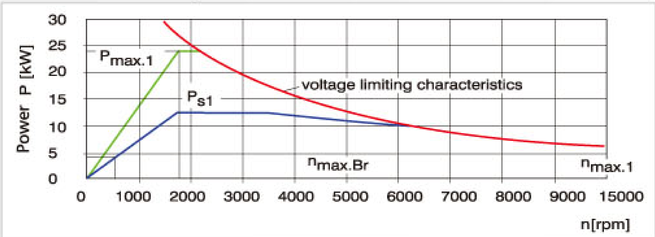

Y24A

Built-in Type Spindle HSK-A63 / Spindle water-cooling Oil Mist Lubrication on Bearings

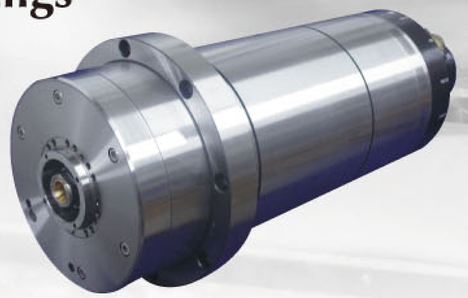

- Built-in type motor: 18/23 kW
- High rigidity, high precision ceramic bearings inner diameter of bearings: Ø65 mm
- Maximum spindle speed: 24,000 rpm
- 6,000 rpm full power output
- High precision, high rigidity, high power
- Low vibration, no noise, extends the life of tools
- Cutter balance should be calibrated to within G2.5

SPINDLE SPEED / POWER DIAGRAM

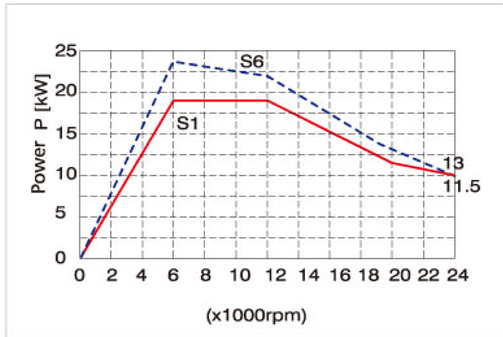

SPINDLE SPEED / POWER DIAGRAM

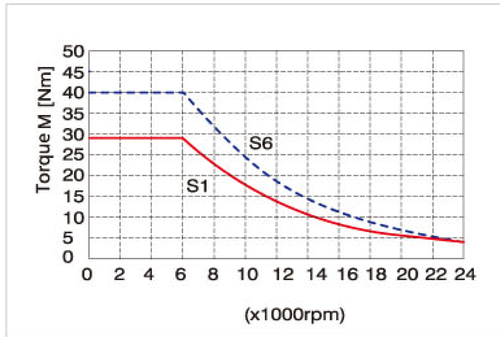

S36E

Built-in Type Spindle HSK-E50 Water Circulated Cooling on Spindle Oil Mist Lubrication on Bearings

- Built-in type motor: 20/24 kW
- High rigidity, high precision ceramic bearings inner diameter of bearings: Ø50 mm
- Maximum spindle speed: 36,000 rpm
- High precision, high rigidity, high power
- Cutter balance should be calibrated to within G2.5

SPINDLE SPEED / POWER DIAGRAM

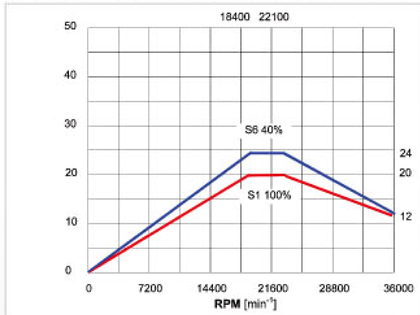

SPINDLE SPEED / TORQUE DIAGRAM

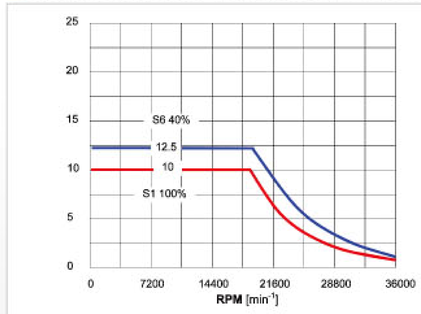

Outstanding Mold Machining Capability

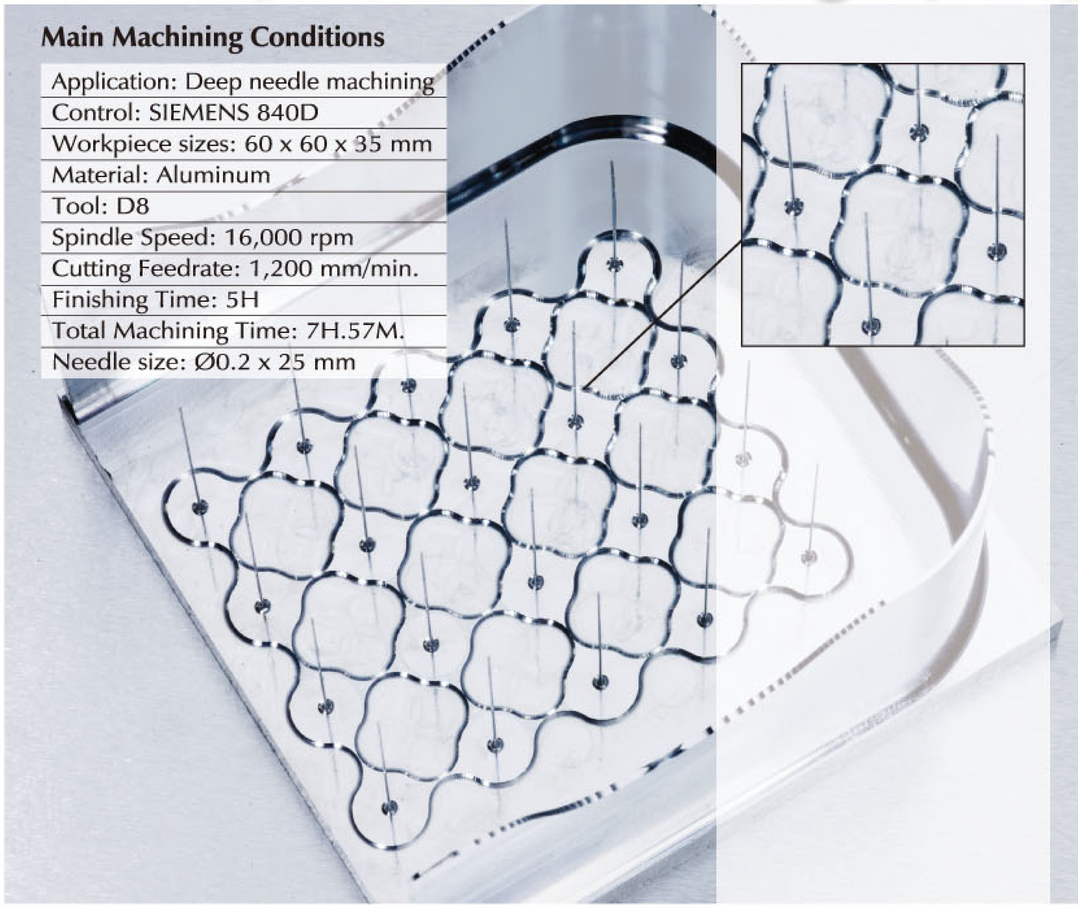

Main Machining Conditions

Application: Deep needle machining
Control: SIEMENS 840D
Workpiece sizes: 60 x 60 x 35 mm
Material: Aluminum
Tool: D8
Spindle Speed: 16,000 rpm
Cutting Feedrate: 1,200 mm/min.
Finishing Time: 5H
Total Machining Time: 7H.57M.
Needle size: Ø0.2 x 25 mm

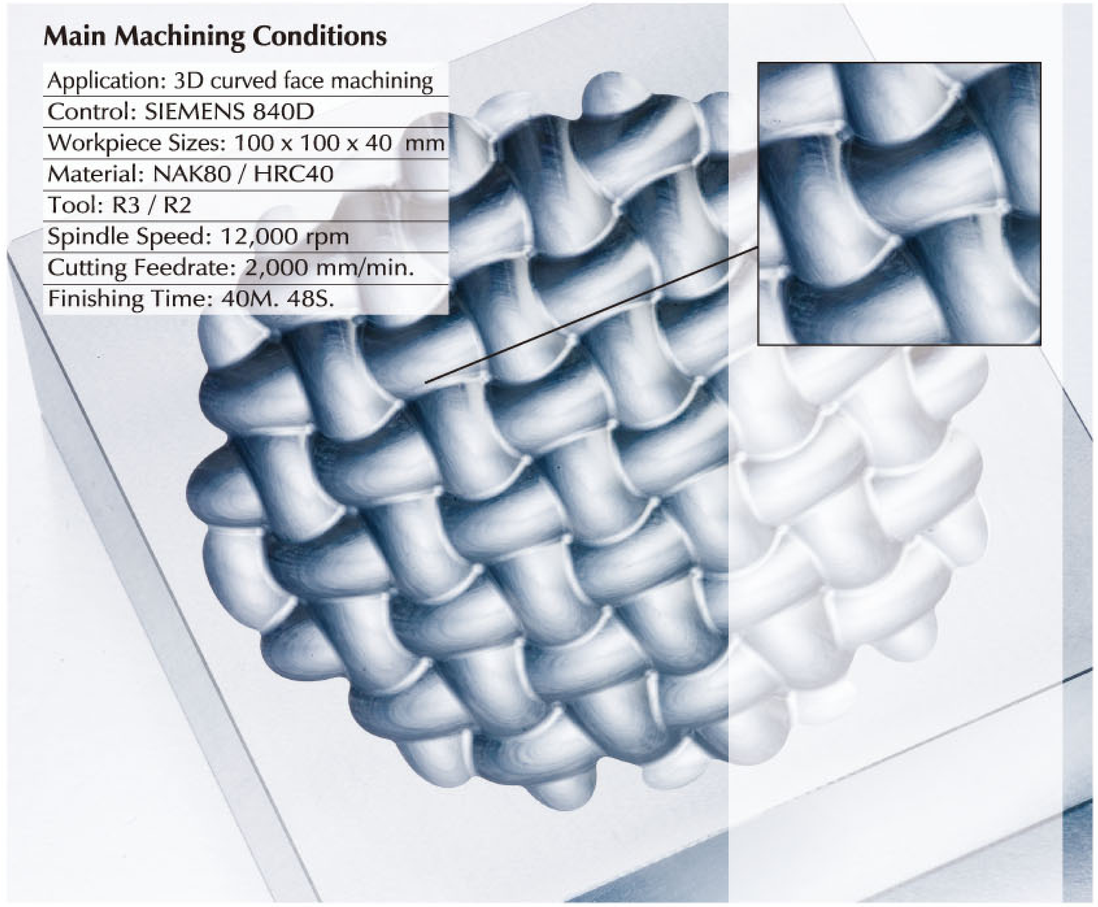

Main Machining Conditions

Application: 3D curved face machining
Control: SIEMENS 840D
Workpiece Sizes: 100 x 100 x 40 mm
Material: NAK80 / HRC40
Tool: R3 / R2
Spindle Speed: 12,000 rpm
Cutting Feedrate: 2,000 mm/min.
Finishing Time: 40M. 48S.

Superior Quality Control

Accuracy Inspection by Laser

The high-tech Renishaw laser unit is applied for inspecting linear positioning accuracy, pitch error and backlash, etc.

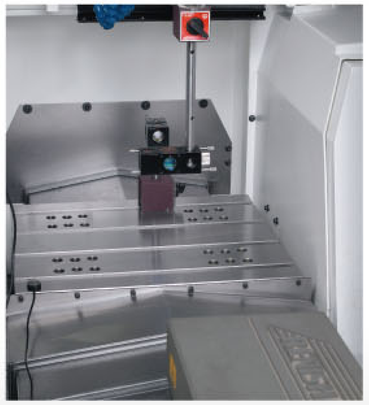

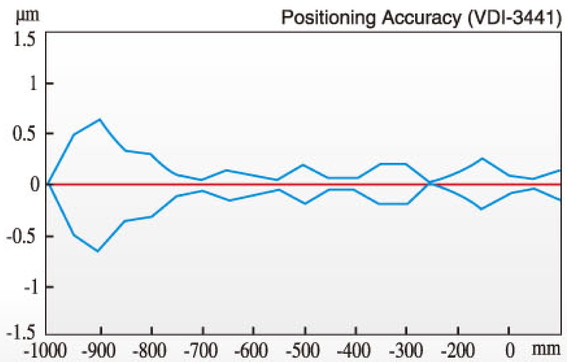

Ball Bar Circulating Accuracy Inspection

A high precision Renishaw ball bar tester is used for inspecting servo accuracy and geometric errors between two axes, thereby ensuring outstanding circularity accuracy.

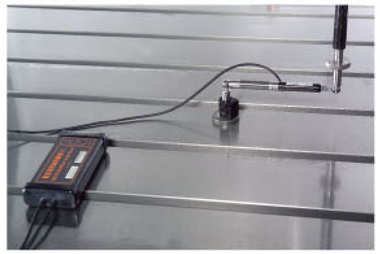

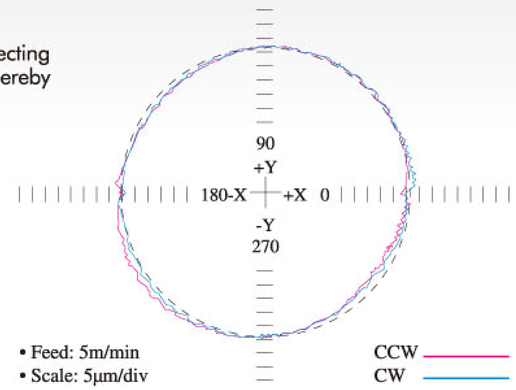

Positioning and Repeatability Accuracy

Model	Control		Positioning Accuracy	Repeatability
GT-66V	SIEMENS FANUC	HEIDENHAIN MITSUBISHI	0.005 mm/Full Stroke (ISO-230-2)	<0.004 mm/Full Stroke (ISO-230-2)

Optimal Integration, Your Best Choice

Gentiger GRAPHITE MACHINING CENTER

- Extra powerful suction motor.
- Automatically removes the graphite dust on the filter pipe to avoid filter jamming.
- Multiple filter pipes exhibit high efficiency dust suction performance.
- Big dust collection space makes it ideal for long time machining.
- Machining operation is not interrupted when moving dust collection tank for cleaning.
- Avoid hardening of stacked graphite powder.

Specifications:

Model	Spindle Speed	Controller	Travel
GT-66V	15,000 rpm	Siemens (Standard) Heidenhain, Fanuc (Optional)	720 x 500 x 400 mm

Enclosed Machining Space

Double-layer dust guard.

High efficiency dust collection capacity- The dust collection port is close to cutter to ensure outstanding dust suction effect.

Various Advanced CNC Controls to Choose from

SIEMENS 828D/840D CONTROL (Standard Equipment)

FANUC 0iMD/31iMB AICC CONTROL (Optional Equipment)

HAIDENHAIN iTNC 530 CONTROL (Optional Equipment)

MITSUBISHI M70 / M700 CONTROL (Optional Equipment)

The Gentiger machining center provides a choice of various advanced CNC controls. Each control permits high speed milling and NURBS curved surface machining functions and is easy to learn and operate.

Ethernet Support Function

Ethernet

The machining programs can be managed by a PC with instant editing then the programs are transferred through Ethernet to the machine. This function will save operation time.

DIMENSIONAL DRAWINGS OF THE MACHINE

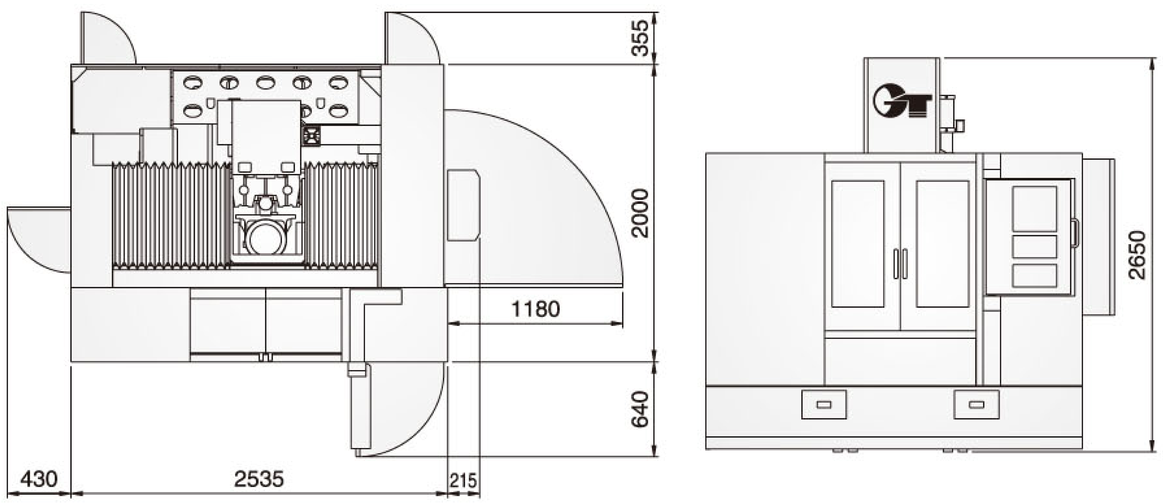

Gentiger GT-66V Specifications

Model	T15P	Y24A	S36E
Max. spindle speed	15,000 rpm	24,000 rpm	36,000 rpm
Spindle taper	BT/BBT-40	HSK-A63	HSK-E50
Spindle motor	11 kw	18/23 kw	20/24 kw
Inner Dia. of spindle bearing	Ø70 mm	Ø65 mm	Ø50 mm
Bearing lubrication	Grease/Oil-Air (Opt.)	Oil-Air	Oil-Air
Spindle cooling	Oil-cooling	Water-cooling	Water-cooling
Distance from spindle center to machine front	750 mm		
Table area	750 x 500 mm		
T-slot	18 x 5 x 100 mm		
Height of table from ground	800 mm		
Max. load of table (Average load)	400 kg		
Travel for X, Y, Z-axes	720 x 500 x 400 mm		
Distance from table surface to spindle nose	150 ~ 550 mm		
Rapid feedrate	30 m/min		
Cutting feedrate	20 m/min		
Magazine capacity	16		
Max. tool length	250 mm		
Max. tool weight	5 kg		
Motor of tool magazine	60 W		
Max. tool dia.	Ø80 mm		
X, Y & Z axis servomotors	X: 6.3 kw / Y: 5 kw / Z: 5 kw		
Air pressure requirement	7 kgf/cm²		
Air conditioner	750 / 550 W		
Spindle cooler	1,950 W	2,650 W	2,650 W
Automatic lubricator (Slideways)	150 W		
Coolant motor	750 W		
Total power consumption (Max.)	40 KVA	45 KVA	45 KVA
Coolant tank	250 liter		
Packing dimensions (L x W x H)	3,200 x 2,140 x 2,550 mm / 870 x 700 x 1,560 mm		
Net weight	6,040 kg		
Gross weight	6,935 kg		

*Other spindle speed also available with this machine.
*All specification, design and characteristics shown in this catalogue are subject to change without prior notice.
*Above specifications are based on SIEMENS control. HEIDENHAIN, FANUC and MITSUBISHI control are available.

STANDARD ACCESSORIES

- ☐ Coolant tank
- ☐ Work lamp
- ☐ Toolbox
- ☐ Coolant motor
- ☐ Coolant system
- ☐ Spindle air blow system
- ☐ Chip air blow device
- ☐ Air conditioner for electrical cabinet
- ☐ MPG
- ☐ M30 work end indication light
- ☐ Spindle cooling system
- ☐ Full enclosed splash guard
- ☐ Central control lubricator
- ☐ Operation and maintenance manual
- ☐ Leveling bolts and pads
- ☐ Network function
- ☐ Spindle heat compensation system

OPTIONAL ACCESSORIES

- ☐ Coolant through spindle
- ☐ Three axes optical scales
- ☐ Oil and lubricant separator
- ☐ Oil mist cooling system
- ☐ Oil mist collector
- ☐ Auto tooling measurement
- ☐ Auto workpiece measurement
- ☐ Caterpillar chip conveyor and cart
- ☐ Graphite dust collector
- ☐ Transformer

Professional High-Speed Machine

Establishment in 1995, GENTIGER has become is the name equal to "High Speed Cutting Expert". Our company spirit, "Perfection, Efficiency, Specialization" is embedded in all GENTIGER machines, as we deliver comprehensive machines and services to our customers worldwide.

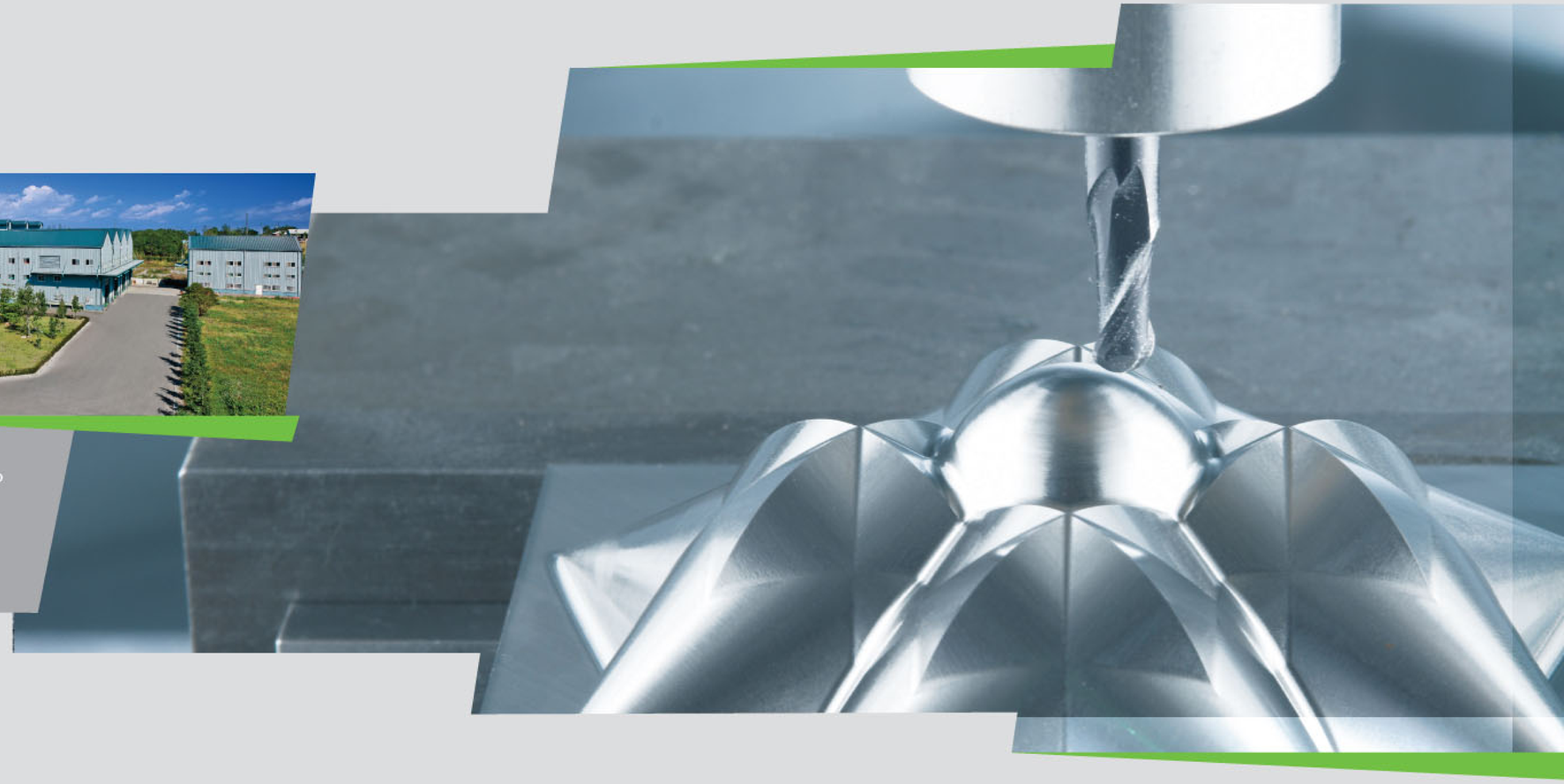

Gentiger Machinery Industrial Co., Ltd.

No. 2-2, Shueitou Lane, Jiahou Rd, Waipu Dist.,
Taichung City 438, Taiwan.
TEL: 886-4-2683-6919 FAX: 886-4-2683-9900
Http://www.gentiger.com.tw
E-mail:gentiger@ms38.hinet.net

1367110000311E

GT-66V

High Speed Double Column Machining Center

www.gentiger.com.tw

CE ISO 9001